| Customer No: | No: 1 |
|---|---|

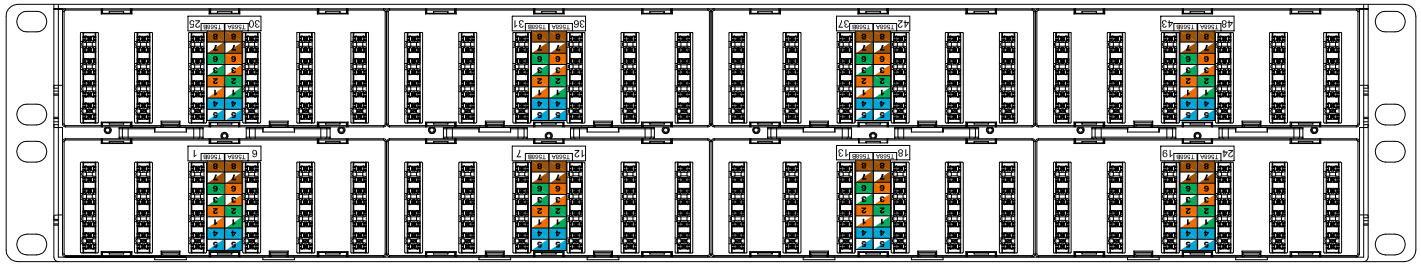

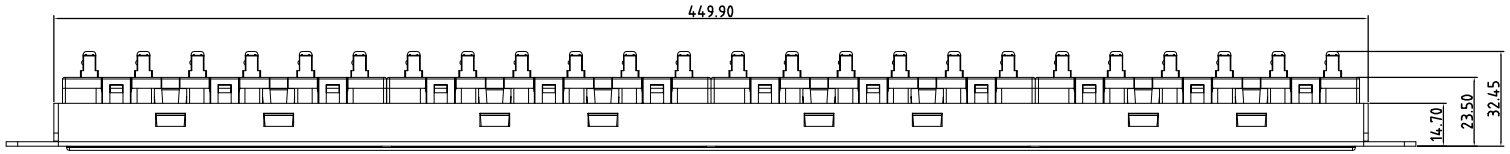


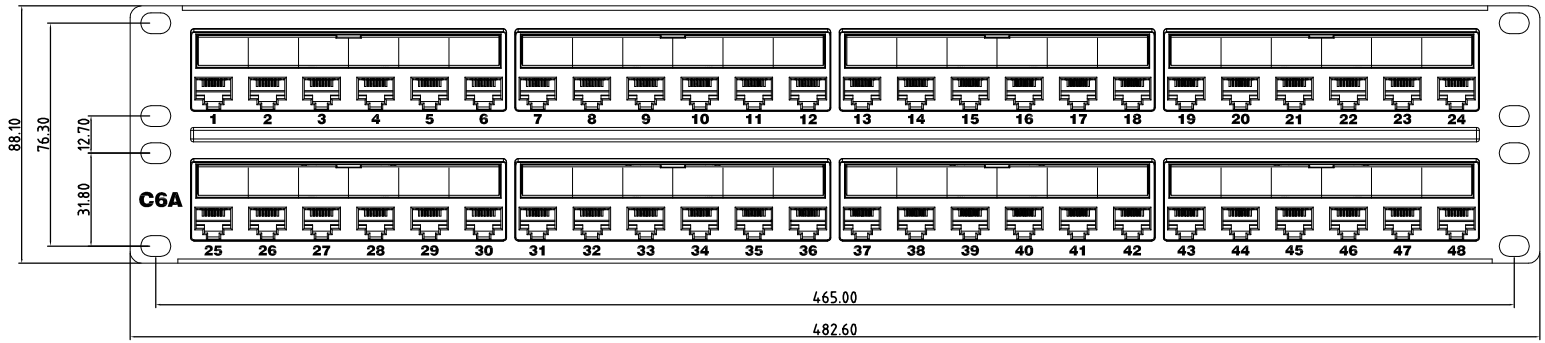


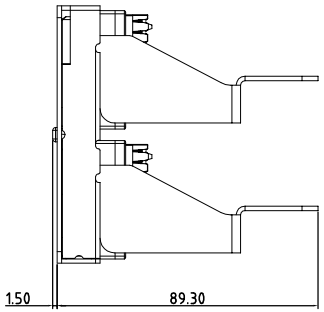


## TRANSMISSION PERFORMANCE

Meet all requirements specified in connecting hardware requirement of TIA/EIA-568.2-D Category 6A

## ELECTRICAL

Electrical Insulation Resistance : 500 MΩ min. @ 100V d.c

Dielectric Withstanding Voltage : 1000V d.c. or a.c. Peak Contact to Contact @ 60 Hz for 1 minute

## MECHANICAL

Insertion / Extraction Life : 750 Cycles Minimum

IDC Wire Gauge : 22 ~ 24 AWG

## PHYSICAL

Housing : High Impact, Flame-Retardant Plastic, UL94V-0

Spring Wire : Phosphor Bronze Alloy Plated With 50 micro-inch of gold

IDC : Phosphor Bronze Alloy With 100 micro-inch 100% Sn Alloy

| UNLESS OTHERWISE SPECIFIED: TOLERANCES | | |
|---|---|---|
| INCH | MM | ANGULAR |
| .x ± .016 | .x ± 0.2 | x ± 1° |
| .xx ± .006 | .xx ± 0.1 | .x ± 0.5° |
| .xxx ± .004 | | |

| | | | |
|---|---|---|---|
| APPROVED | | VERICOM® | |
| CHECKED | | | |
| DRAWING | | TITLE | CAT 6A PATCH PANEL |
| DATE | 10/02/20 | ITEM NO. | UPP66WL48 |
| CHECKED | | | UNIT: mm |